Instructions-Parts

24G621 Agitator Speed Controller Accessory

3A1315C
EN

Accessory kit to control and automatically maintain the speed of an air-powered agitator.
For professional use only.

Important Safety Instructions
Read all warnings and instructions in this manual **and in your separate agitator manual. Save these instructions.**

Patent Pending

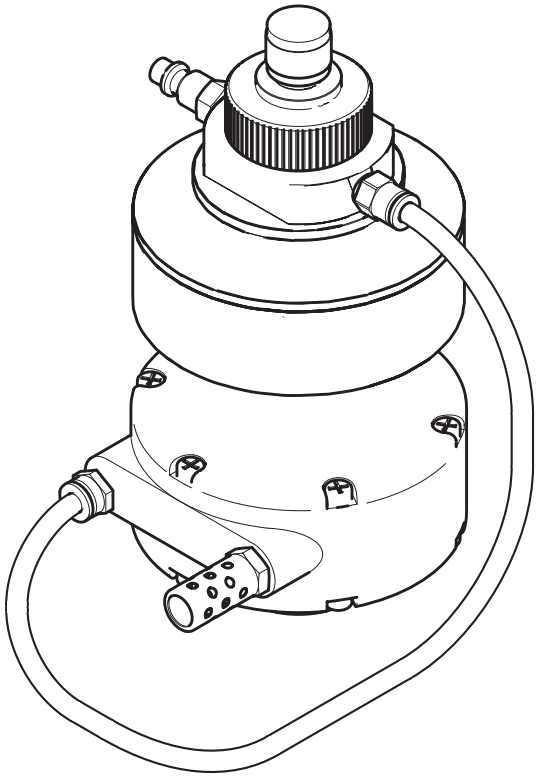

TI17253a

II 2 G T6

PROVEN QUALITY. LEADING TECHNOLOGY.

Contents

Installation..... 3
Operation..... 5
Troubleshooting..... 6
Repair..... 7
24G621 Kit Parts 8
Technical Data 10
Notes 11
Graco Standard Warranty..... 12

Installation

The agitator speed controller fits the following Graco pneumatic rotary motors:

Motor Part No.
101140
16A871
101388
111310

NOTE: Before installing, ensure that the agitator air motor has at least 5 in. (12.7 cm) of vertical clearance and 4 in. (10.2 cm) of horizontal clearance in all directions around it.

NOTE: If you are using an air line lubricator, install it in the air line upstream of the speed controller.

1. Remove the air motor top cap (A) and needle valve (B) using the multi-function wrench (26). Store these parts in a safe place; they will be needed if the speed controller is ever removed.

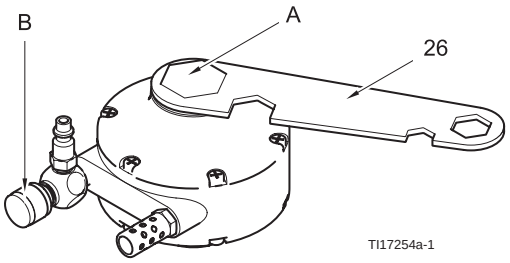

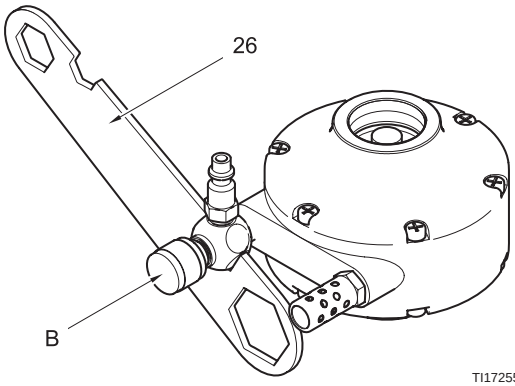

2. Install the push-to-connect air tube connector (21) in place of the needle valve.

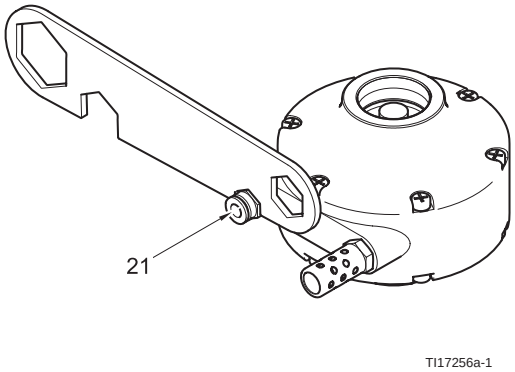

3. Screw the compression nut (24) onto the flange connector (23) finger-tight. Place the connector assembly (23, 24) onto the exposed shaft of the air motor, flange connector side down.

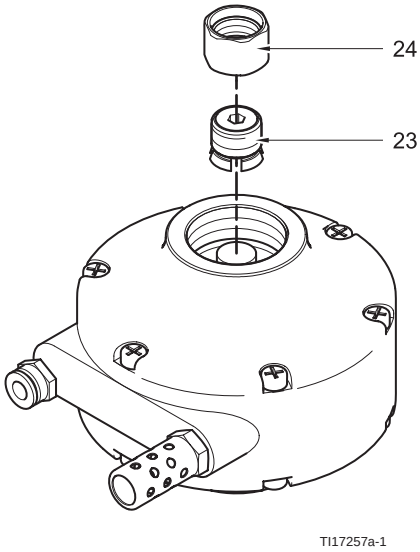

4. Using the allen wrench (25) and multi-function wrench (26), tighten the compression nut (24) onto the flange connector at least 1/8 turn past finger tight. This provides a firm connection to the motor shaft.

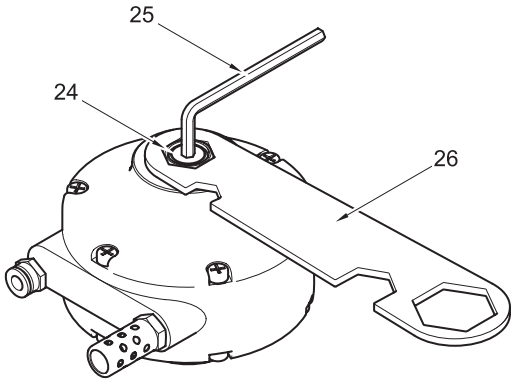

TI17258a-1

5. Ensure that the drive shaft hex (C) engages the hex socket (D) in the flange connector. Screw the base of the speed controller into the threads at the top of the air motor until hand tight.

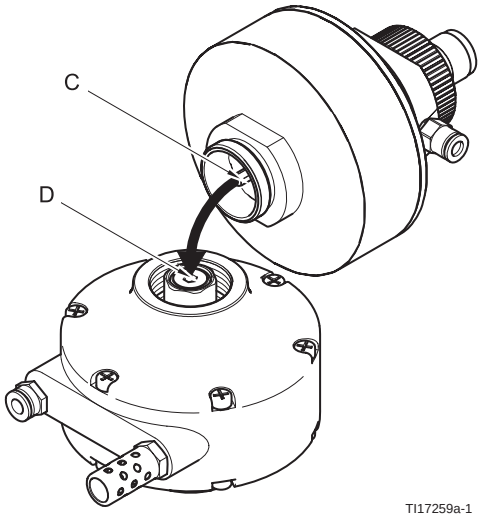

TI17259a-1

6. Connect the air tubing (27) between the speed controller tube connector (29) and the air motor tube connector (21).

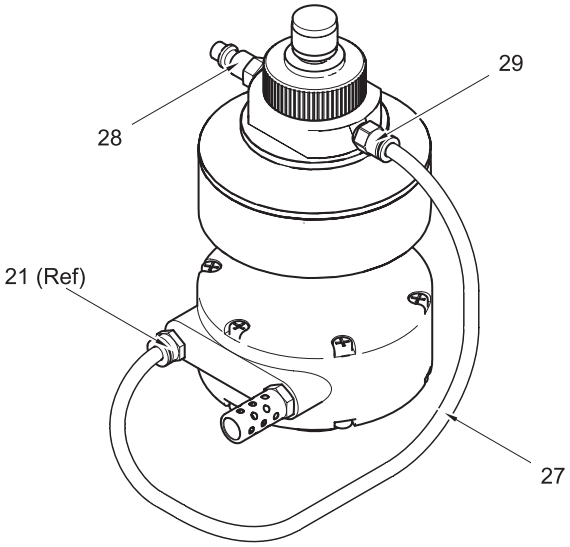

TI17253a-1

7. Return the unit to service. Connect the main air line to the quick-disconnect fitting (28) on the speed controller.

Operation

Connect the main air line to the quick disconnect fitting (28) on the agitator speed controller. Do not exceed the maximum air inlet pressure of 100 psi (0.7 MPa, 7.0 bar).

Set the agitator speed using the knob (16) on the top of the speed controller. Turn the knob counterclockwise (outward) to increase agitator speed. Turn the knob clockwise (inward) to decrease agitator speed. Once the desired agitator speed is set, the speed controller will maintain that speed by regulating the airflow to the air motor.

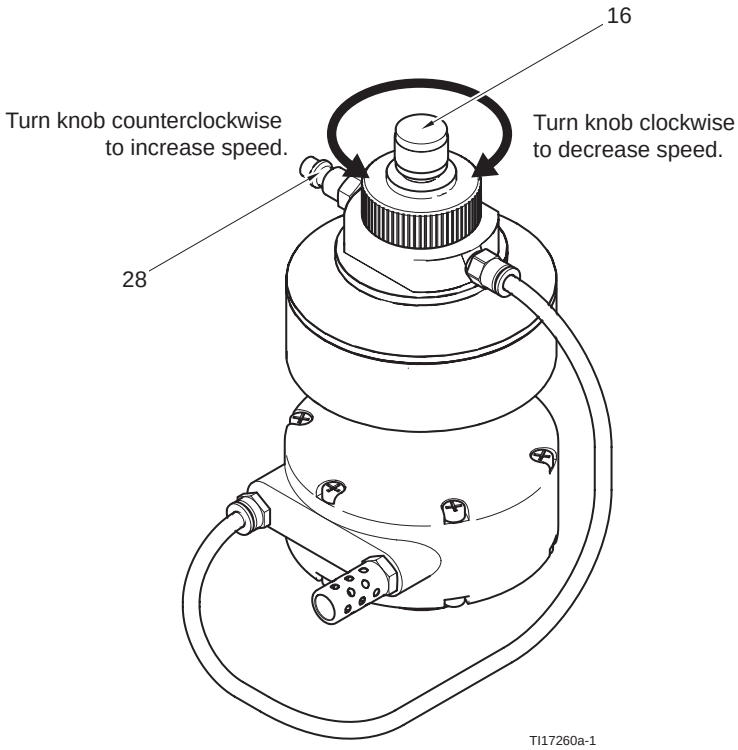

To shut off the agitator, disconnect the air supply or turn the speed adjustment knob clockwise until it is fully closed.

Troubleshooting

Problem	Solution
The speed controller does not adjust for a change in load, or shuts off before the knob (16) is turned all the way down.	Remove the needle (13). and liberally lubricate the needle and o-ring (33) with multi-purpose lithium based grease.
The speed controller does not maintain a consistent speed, or the speed rapidly fluctuates.	Replace the needle (13), u-cup (11), and o-ring (33), using Repair Kit 24J886.
Upon startup, the motor runs away for a few seconds before the speed controller slows it down.	Ensure that the compression nut (24) and flange connector (23) are securely tightened to the motor shaft. See Installation, page 3 .
The speed controller does not shut off the air motor when the knob is turned all the way down, or the speed cannot be reduced by turning the knob down.	Replace the needle (13), o-ring (18), and bearing (20), using Repair Kit 24J886.

Repair

NOTE: To repair the agitator, see your separate agitator manual.

NOTE: Repair Kit 24J886 is available. Order the kit separately. Kit parts are marked with an asterisk, for example (3*). For the best results use all the parts in the kit.

NOTE: Use multi-purpose lithium based grease where ever lubrication is required. Order Part No. 111920.

1. Disconnect the main air line to the speed controller.
2. Disconnect the tube (27) connecting the speed controller and air motor.
3. Unscrew the adjustment nut (15) from the upper housing (2). Turn the knob (16) fully clockwise (inward) to access the o-ring (18) on the bottom plate of the seat (14). Remove the o-ring and replace with the new o-ring (18*). Lubricate the o-ring.
4. Remove the large o-ring (19) on the upper housing (2). Replace with a new o-ring (19*). Lubricate the o-ring.
5. Unscrew the upper housing (2) from the lower housing (1). The drive shaft (4) and cam arms (8) may come out of the lower assembly.
6. Remove the two ball bearing assemblies (3, 20) from the drive shaft (4). Replace with the new ball bearing assemblies. Install the larger ball bearing assembly (3) on the bottom of the shaft. Install the smaller ball bearing assembly (20*) on the top of the shaft, above the large washer (12).

   NOTE: The ball bearing assemblies each consist of one bearing and two washers. Place one washer above the bearing and the other washer below the bearing before installing the assembly.
7. Push the needle (13) out of the upper housing (2) from the top. Using an o-ring pick, remove the u-cup (11) and o-ring (33) from the upper housing. Lubricate the new o-ring (33*) and u-cup (11*) and install in the upper housing. The lips of the u-cup must face up.
8. Lubricate the new needle (13*) and install in the upper housing (2) from the bottom, being sure to align the flat face on the needle with the mating flat surface in the housing.
9. Ensure that the cam arms (8) align with the groove on the bottom side of the large washer (12). Install the drive shaft (4) and cam arm assembly into the lower housing (1), making sure the bearing (3*) seats fully in the recess of the housing.
10. Screw the upper housing (2) fully onto the lower housing (1).
11. Turn the adjustment knob (16) all the way counterclockwise (outward). Screw the adjustment nut (15) fully onto the upper housing (2).
12. Connect the air tubing (27) between the speed controller tube connector (29) and the air motor tube connector (21).
13. Return the unit to service. Connect the main air line to the quick-disconnect fitting (28) on the speed controller.

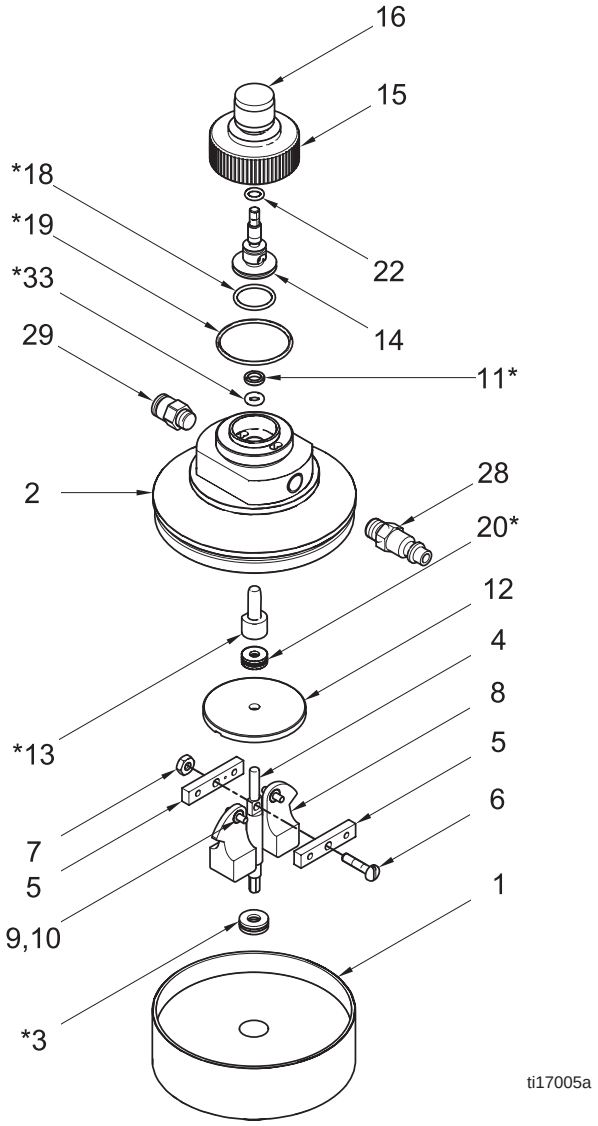

24G621 Kit Parts

Series B
The kit contains all necessary parts and tools to install the agitator speed controller.

Ref. No.	Description	Qty
1	HOUSING, lower, speed controller	1
2	HOUSING, upper, speed controller	1
3*	BALL BEARING	1
4	SHAFT, drive	1
5	BAR, mounting	2
6	SCREW, machine, pan-head; 8–32 x 3/4 in. (19 mm)	1
7	NUT, hex; 8–32	1
8	ARM, cam	2
9	BEARING, sleeve; bronze	2
10	PIN	2
11*	PACKING, u-cup; UHMWPE	1
12	WASHER, speed controller	1
13*	NEEDLE, speed controller	1
14	SEAT, needle	1
15	NUT, adjustment	1
16	KNOB, adjusting	1
18*	O-RING; chemically resistant fluoroelastomer; 0.816 in. (20.7 mm) OD	1
19*	O-RING; chemically resistant fluoroelastomer; 1.5 in. (38 mm) OD	1
20*	BALL BEARING	1
21	CONNECTOR; 1/4 npt(m) x 1/4 in. (6 mm) OD tube	1
22	O-RING; chemically resistant fluoroelastomer; 0.441 in. (11.2 mm) OD	1
23	CONNECTOR, flange; 3/16 hex socket	1
24	NUT, compression	1
25	WRENCH, allen; 3/16 hex	1
26	WRENCH, multi-function	1
27	TUBE, nylon; 1/4 in. (6 mm) OD; 2 ft (0.6 m)	1
28	FITTING, quick-disconnect, air; 1/8 npt(m)	1
29	CONNECTOR; 1/8 npt(m) x 1/4 in. (6 mm) OD tube	1
33*	O-RING; buna-N; 0.375 in. (9.5 mm) OD	1

* These parts are included in Repair Kit 24J886, Series B. All parts in the kit must be used for correct repair.

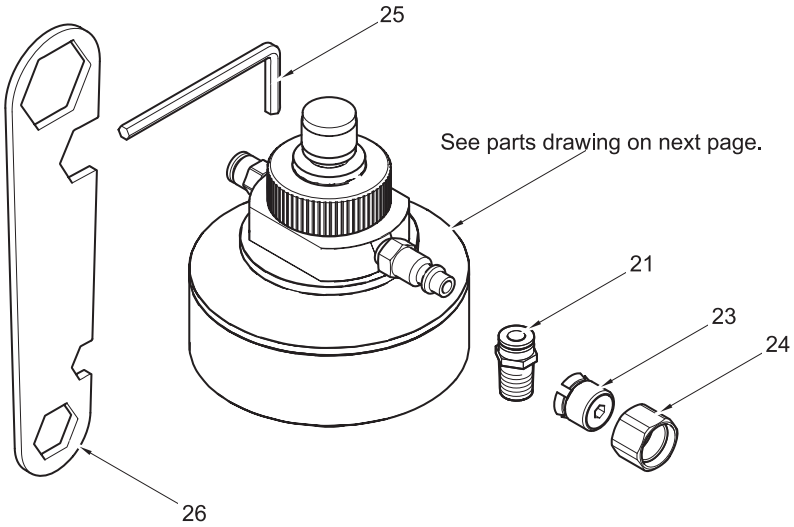

TI17004a-1

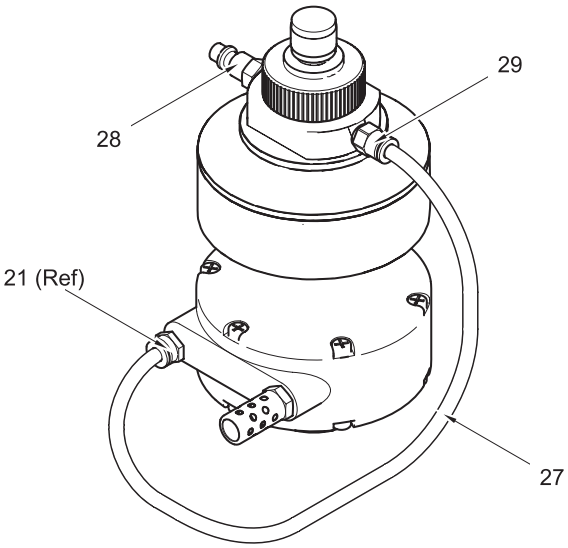

TI17253a-1

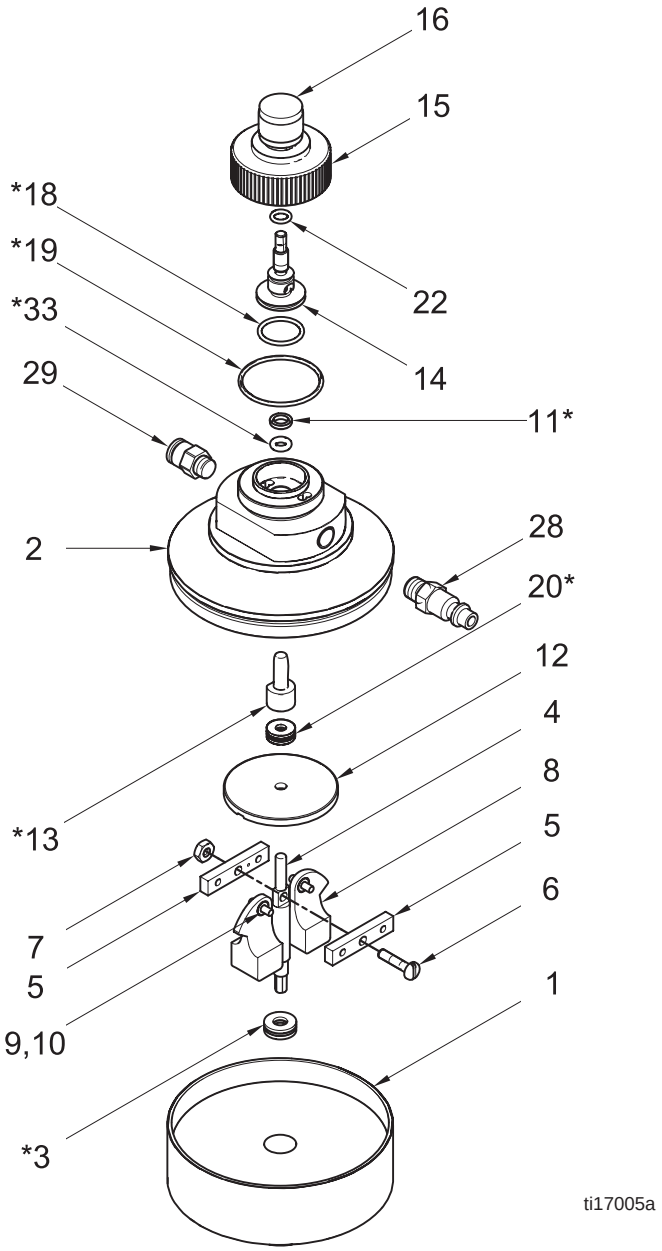
16
15
*18
*19
*33
22
14
29
11*
2
28
20*
12
4
8
*13
5
6
7
5
1
9,10
*3
ti17005a

Technical Data

Maximum air supply pressure	100 psi (0.7 MPa, 7 bar)
Minimum air supply pressure	70 psi (0.5 MPa, 4.9 bar)
Maximum speed	1000 rpm
Maximum speed controller air temperature	130°F (55°C)
Main air inlet size	1/8 npt quick-disconnect fitting
Speed control range	100–1000 rpm
Diameter	4 in. (102 mm)
Height (installed)	4.5 in. (114 mm)
Weight	1.4 lb (0.64 kg)

Notes

Graco Standard Warranty

Graco warrants all equipment referenced in this document which is manufactured by Graco and bearing its name to be free from defects in material and workmanship on the date of sale to the original purchaser for use. With the exception of any special, extended, or limited warranty published by Graco, Graco will, for a period of twelve months from the date of sale, repair or replace any part of the equipment determined by Graco to be defective. This warranty applies only when the equipment is installed, operated and maintained in accordance with Graco's written recommendations.

This warranty does not cover, and Graco shall not be liable for general wear and tear, or any malfunction, damage or wear caused by faulty installation, misapplication, abrasion, corrosion, inadequate or improper maintenance, negligence, accident, tampering, or substitution of non-Graco component parts. Nor shall Graco be liable for malfunction, damage or wear caused by the incompatibility of Graco equipment with structures, accessories, equipment or materials not supplied by Graco, or the improper design, manufacture, installation, operation or maintenance of structures, accessories, equipment or materials not supplied by Graco.

This warranty is conditioned upon the prepaid return of the equipment claimed to be defective to an authorized Graco distributor for verification of the claimed defect. If the claimed defect is verified, Graco will repair or replace free of charge any defective parts. The equipment will be returned to the original purchaser transportation prepaid. If inspection of the equipment does not disclose any defect in material or workmanship, repairs will be made at a reasonable charge, which charges may include the costs of parts, labor, and transportation.

THIS WARRANTY IS EXCLUSIVE, AND IS IN LIEU OF ANY OTHER WARRANTIES, EXPRESS OR IMPLIED, INCLUDING BUT NOT LIMITED TO WARRANTY OF MERCHANTABILITY OR WARRANTY OF FITNESS FOR A PARTICULAR PURPOSE.

Graco's sole obligation and buyer's sole remedy for any breach of warranty shall be as set forth above. The buyer agrees that no other remedy (including, but not limited to, incidental or consequential damages for lost profits, lost sales, injury to person or property, or any other incidental or consequential loss) shall be available. Any action for breach of warranty must be brought within two (2) years of the date of sale.

GRACO MAKES NO WARRANTY, AND DISCLAIMS ALL IMPLIED WARRANTIES OF MERCHANTABILITY AND FITNESS FOR A PARTICULAR PURPOSE, IN CONNECTION WITH ACCESSORIES, EQUIPMENT, MATERIALS OR COMPONENTS SOLD BUT NOT MANUFACTURED BY GRACO. These items sold, but not manufactured by Graco (such as electric motors, switches, hose, etc.), are subject to the warranty, if any, of their manufacturer. Graco will provide purchaser with reasonable assistance in making any claim for breach of these warranties.

In no event will Graco be liable for indirect, incidental, special or consequential damages resulting from Graco supplying equipment hereunder, or the furnishing, performance, or use of any products or other goods sold hereto, whether due to a breach of contract, breach of warranty, the negligence of Graco, or otherwise.

FOR GRACO CANADA CUSTOMERS

The Parties acknowledge that they have required that the present document, as well as all documents, notices and legal proceedings entered into, given or instituted pursuant hereto or relating directly or indirectly hereto, be drawn up in English. Les parties reconnaissent avoir convenu que la rédaction du présente document sera en Anglais, ainsi que tous documents, avis et procédures judiciaires exécutés, donnés ou intentés, à la suite de ou en rapport, directement ou indirectement, avec les procédures concernées.

Graco Information

To place an order, contact your Graco Distributor or call to identify the nearest distributor.

Phone: 612-623-6921 **or Toll Free:** 1-800-328-0211 **Fax:** 612-378-3505

All written and visual data contained in this document reflects the latest product information available at the time of publication.

Graco reserves the right to make changes at any time without notice.

Original Instructions. This manual contains English, MM 3A1315

Graco Headquarters: Minneapolis

International Offices: Belgium, China, Japan, Korea

GRACO INC. AND SUBSIDIARIES • P.O. BOX 1441 • MINNEAPOLIS, MN 55440-1441 • USA

Copyright 2011, Graco Inc. All Graco manufacturing locations are registered to ISO 9001.

www.graco.com

Revised June 2013